Pre-coolers
AK 20 V, 11 LD spec., 165 SS and 165 T

In a number of applications with high moisture content in sample gas streams the installation of additional condensate separators upstream the final cooler is in many aspects a favourable solution. Further more these separators either as stand alone units or in combination with coalescence filters are in some applications the appropriate alternative to a gas cooler.

Separator AK 20 V - with automatic drain valve
Vertically mounted the AK 20 V serves as a separator upstream of a SCS system or as a condensate trap. The unit has an integrated drain valve with low friction pivot points giving exceptional long service free life. The unit comes with a plug in the gas outlet which is to be removed if used as a separator.

Separator 11 LD spec. - with automatic drain valve
Mounted vertically the 11 LD spec. serves as an upstream separator with an integrated drain valve. The drain valve has no mechanical pivot points giving an exceptional long service life.

Centrifugal separator 165 SS and 165 T
The type 165 is a combination of a centrifugal separator and a coarse filter. The upper end of the shell is containing a coarse demister which is removing both the last rest of the moisture forming it into condensate and particulate that may also be carried by the sample gas. Quite a part of the particulate is directly washed out by the condensate and thus drained off.

Bühler Meß- und Regeltechnik GmbH
D - 40880 Ratingen, Harkortstr. 29
Tel.: + 49 (0) 2102 / 4989-0 Fax: + 49 (0) 2102 / 4989-20
e-mail: analyse@buehler-ratingen.com

technical data AK 20 V

	AK 20 V
material	PVDF
operating pressure max.	2 bar/ 29 psi abs.
operating temperature max.	+ 100 °C/ 210 °F
weight	0,3 kg

TÜV - approved

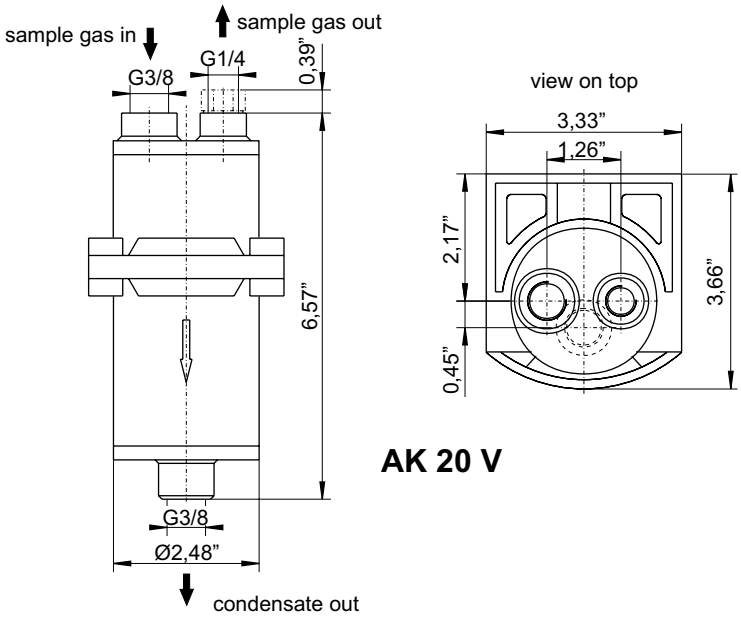

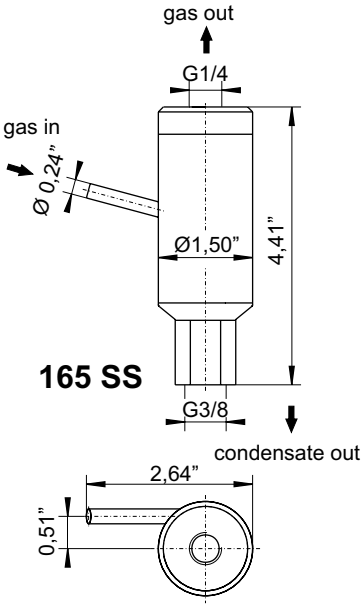

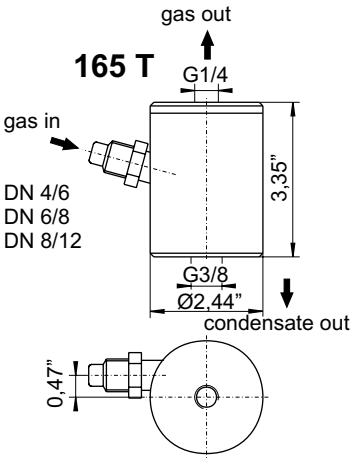

technical data 165 SS and 165 T

	165 SS	165 T
material	stainless steel 1.4571	PTFE
max. gasflow rate	200 l/h	200 l/h
max. op. pressure	64 bar/ 930 psi	4 bar/ 60 psi
max. op. temperature	+ 180 °C/ 360 °F	+ 80 °C/ 180 °F

technical data 11 LD spec.

	11 LD spec.
material	
- housing	stainless steel 1.4306
- valve with seat	stainless steel 1.4401
- float and lever	stainless steel 1.4301
max. operating pressure	20 bar/ 290 psi
max. operating temperature	+ 200 °C/ 390 °F
weight	0,8 kg

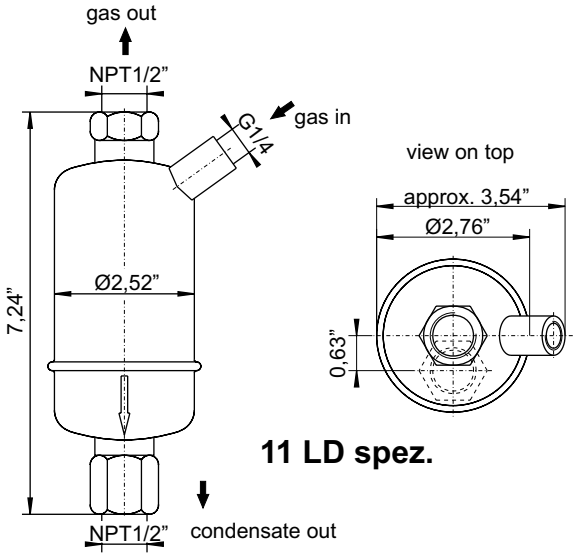

Please indicate with order

part no.	*type*
44 11 004	AK 20 V
46 13 099	centrifugal separator 165 SS
46 13 299	centrifugal separator 165 T, connection DN 4/6
46 13 399	centrifugal separator 165 T, connection DN 6/8
46 13 499	centrifugal separator 165 T, connection DN 8/12
44 10 002	11 LD spec.

Attention!
Be careful:
condensate may be harmful

we reserve the right to amend specification