Gas coolers: chiller and scrubber

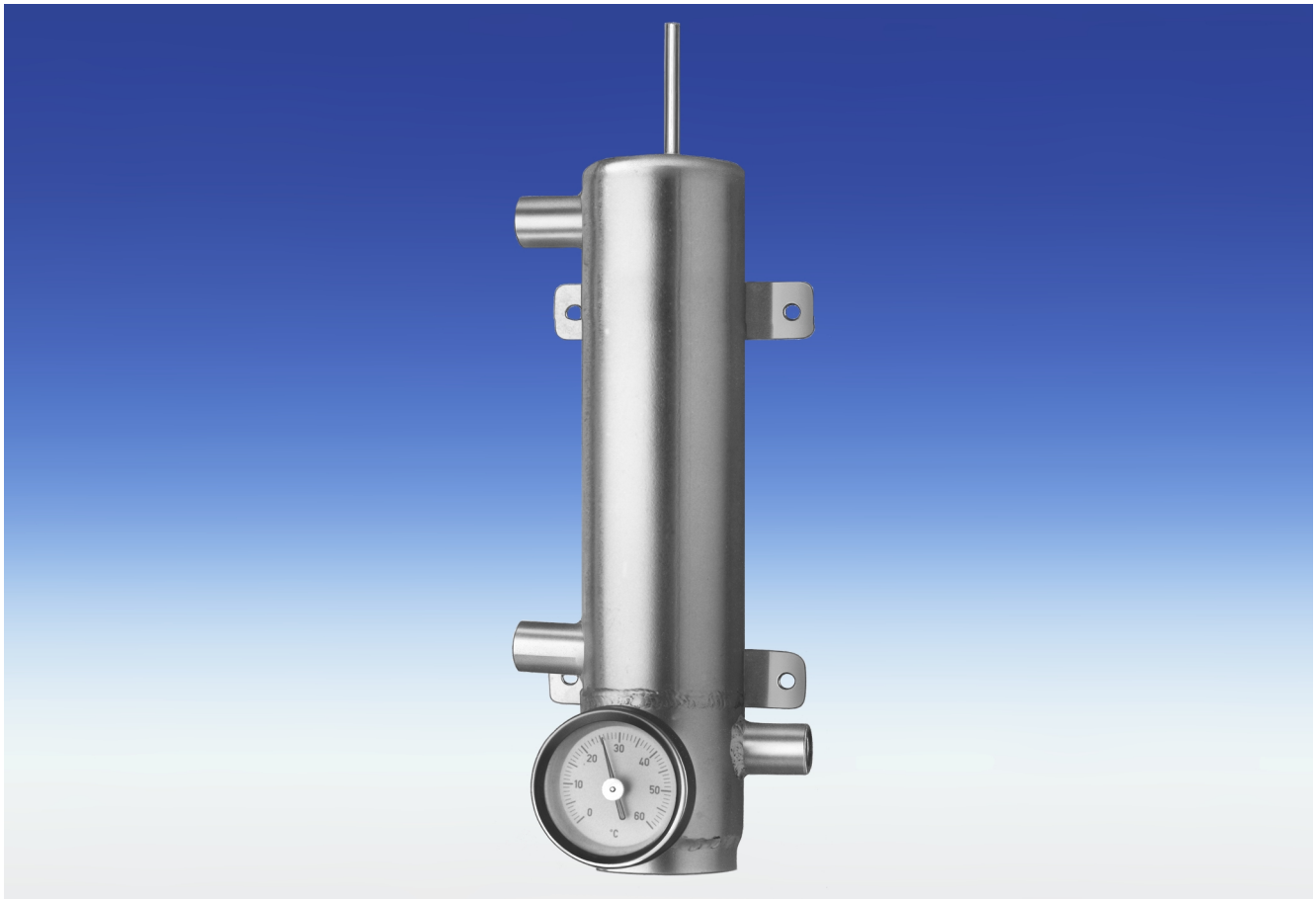

In addition to the electrically operated sample gas coolers we offer chillers and scrubbers using water as the cooling agent. The following units are just examples. Please give us your detailed request for application specific solutions.

Chiller 170 IST and 170 IST titanium
The sample gas is directed through a coil type heat exchanger which is immersed into a shell through which water is circulated. The separated condensate is drained through a port in the bottom. A thermometer is indicating the sample gas outlet temperature. Type 170 IST titanium is completely made from titanium.
Both chillers must be mounted vertically.

Scrubber 161 PVDF spec.
Scrubbers use the contact between water and the sample gas to wash out unwanted components. The jacket and the inner tube are filled with water up to a defined level. The sample gas inlet is situated below water level hence leading through the scrubbing process. The „clean“ gas is leaving on top of the scrubber.

Bühler Meß- und Regeltechnik GmbH
D - 40880 Ratingen, Harkortstr. 29
Tel.: + 49 (0) 2102 / 4989-0 Fax: + 49 (0) 2102 / 4989-20
e-mail: analyse@buehler-ratingen.com

technical data type 170 IST / 170 IST titanium

	170 IST	170 IST titanium
cooling agent	water	water
material	SS 316 Ti	titanium
max. operation pressure	25 bar/ 360 psi	15 bar/ 220 psi
max. gas inlet temperature	+ 160 °C/ 320 °F	+ 160 °C/ 320 °F

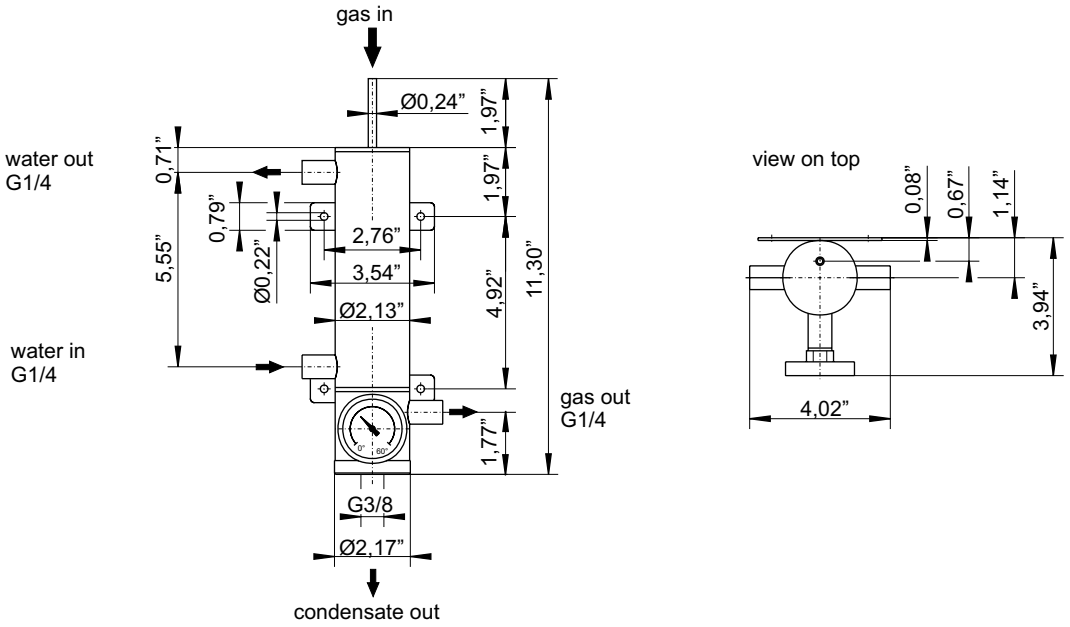

technical data type 161 PVDF spec.

	161 PVDF* spec.
material	PVDF
water consumtion	max. 120 l/h
gasflow	max. 420 l/h
max. operation pressure	2 bar/ 29 psi
max. operation temperature	+ 80 °C/ 180 °F

* stainless steel version upon request

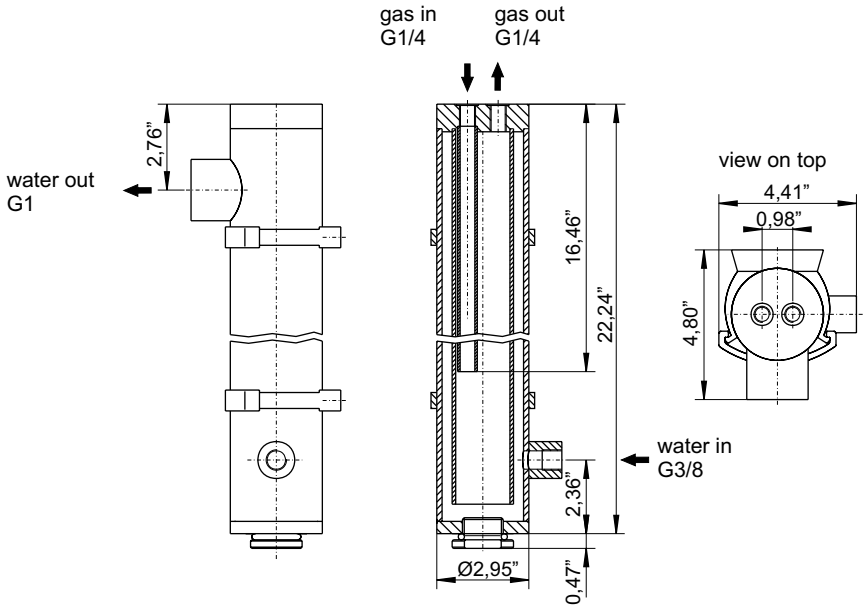

Please indicate with order

part no.	*type*
46 12 999	170 IST
46 41 999	170 IST titanium
46 80 999	161 PVDF spec.

we reserve the right to amend specification