Condensate discharge by peristalitic pumps

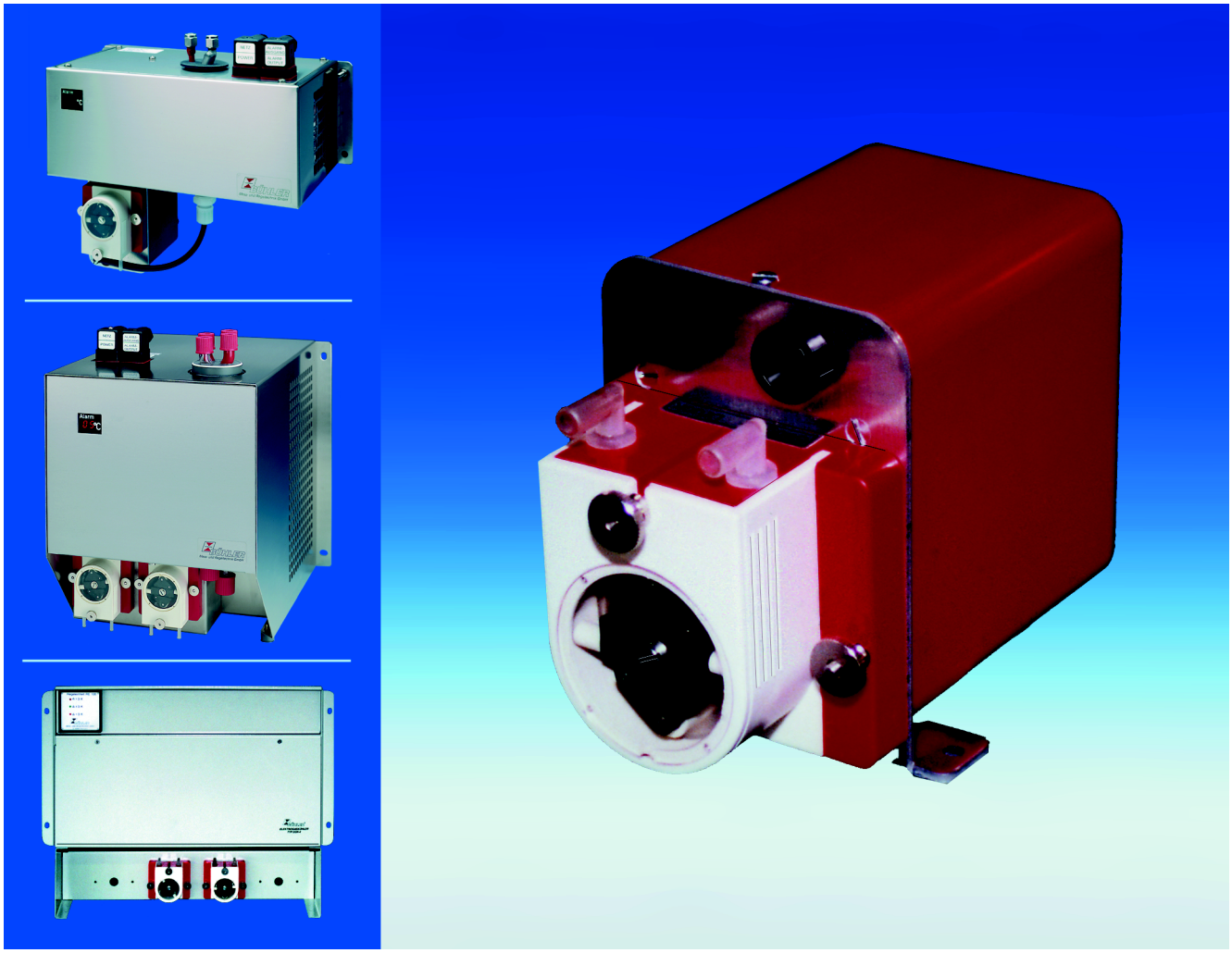

The discharge of condensate from sample conditioning systems requires special discharge systems.

Peristalic pumps are the appropriate equipment for systems operating at pressure below ambient.

To make integration as simple as possible, we provide add-on frames which are mounted directly to the EGK 1/2 or EGK 4 compressor coolers. Up to 2 pumps can be integrated inside the EGK 1/2 and up to 4 inside the EGK 4 frame.

For other applications standalone pumps with protection housing are available.

Peltier coolers PKE 4 can be delivered with a pump already mounted.

Bühler Meß- und Regeltechnik GmbH
D - 40880 Ratingen, Harkortstr. 29
Tel.: + 49 (0) 2102 / 4989-0 Fax: + 49 (0) 2102 / 4989-20
e-mail: analyse@buehler-ratingen.com

DA 45 0004
11/1999

technical data peristaltic pump

power supply	230 V AC, 50/60 Hz	115 V AC, 50/60 Hz
power consumption	60 mA	110 mA
protection class	IP 51	IP 51
connection	flat plug	flat plug

suction volume	0,3 l/h	0,3 l/h
vaccum	> 1,5 psi	> 1,5 psi
pressure	> 7,3 psi	> 7,3 psi
hose	3x1, Silicon	3x1, Silicon

higher suction volume on request

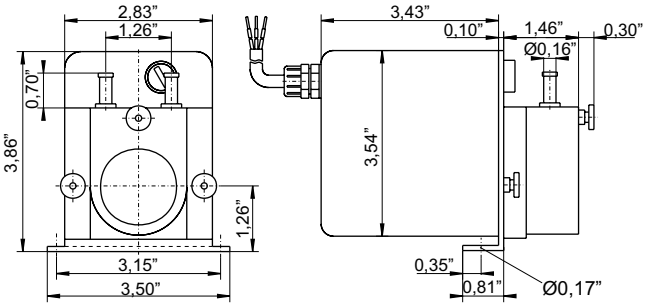

Please indicate with order

part no.	*type*
Pump	
45 10 122	peristalic pump with shield for stand alone installation 230 V AC, 50/60 Hz, protection class IP 51
45 10 222	peristalic pump with shield for stand alone installation 115 V AC, 50/60 Hz, protection class IP 51

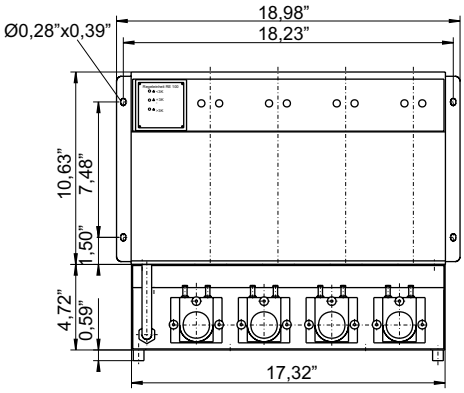

EGK 4	
45 10 120	auxiliary frame for EGK 4 assembled with peristaltic pump 230 V AC, 50/60 Hz
45 10 220	auxiliary frame for EGK 4 assembled with peristaltic pump 115 V AC, 50/60 Hz
45 10 121	additional peristaltic pump 230 V AC, 50/60 Hz
45 10 221	additional peristaltic pump 115 V AC, 50/60 Hz

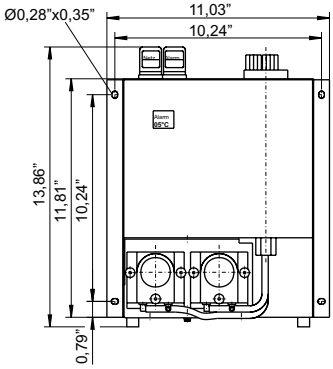

EGK 1/2	
45 10 130	auxiliary frame for EGK 1/2 assembled with peristaltic pump 230 V AC, 50/60 Hz
45 10 131	auxiliary frame for EGK 1/2 assembled with peristaltic pump 115 V AC, 50/60 Hz
45 10 230	additional peristaltic pump 230 V AC, 50/60 Hz
45 10 231	additional peristaltic pump 115 V AC, 50/60 Hz

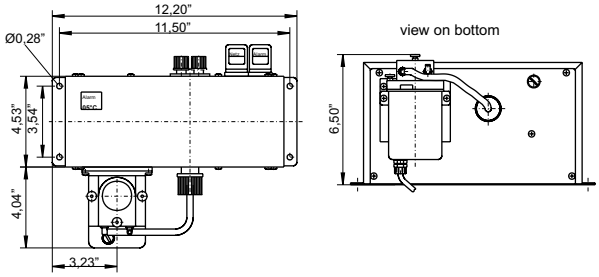

PKE 4	
44 60 799	peristaltic pump assembled with PKE 4 230 V AC, 50/60 Hz
44 60 899	peristaltic pump assembled with PKE 4 115 V AC, 50/60 Hz

we reserve the right to amend specification