Automatic Condensate Drains AK5, AK 20 and 11 LD V 38

The discharge of condensate from sample conditioning systems requires special discharge systems.
Particularly for the use in pressurised sample conditioning systems the following condensate discharge have been developed

AK 5
AK 20
11 LD V 38

All these units have special designed low friction drain valves which increase the operation reliability and the life time.

- **easy to assemble due to various geometrical forms**
- **long life time**
- **various materials to meet with application parameters**
- **high reliability of operation**

Bühler Meß- und Regeltechnik GmbH
D - 40880 Ratingen, Harkortstr. 29
Tel.: + 49 (0) 2102 / 4989-0 Fax: + 49 (0) 2102 / 4989-20
e-mail: analyse@buehler-ratingen.com

technical data AK 5

	AK 5
flow	100 l/h H_2O / 1 bar
material	PVDF
operating pressure max.	2 bar/ 29 psi
operating temperature max.	+ 100 °C/ 210 °F
weight	0,25 kg
test pressure	36 bar / 520 psi

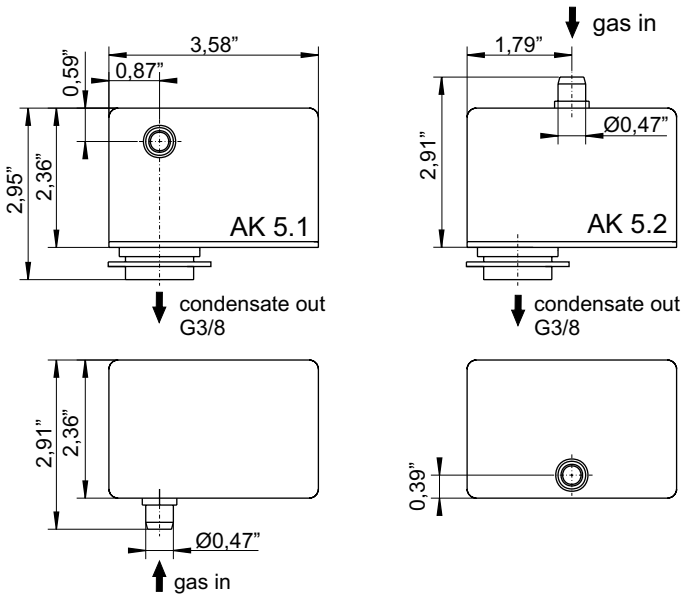

technical data AK 20

	AK 20
material	PVDF
operating pressure max.	2 bar/ 29 psi
operating temperature max.	+ 100 °C/ 210 °F
weight with mounting frame	0,3 kg
(gas out is closed)	
TÜV - approved	

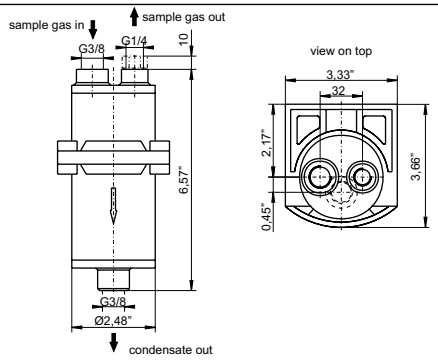

technical data 11 LD V 38

	11 LD V 38
material	
- housing	SS 1.4306
- valve and seat	SS 1.4401
- float and lever	SS 1.4301
operating pressure max.	20 bar/ 290 psi
test pressure	200 bar
operating temperature max.	+ 200 °C/ 390 °F
weight	0,8 kg

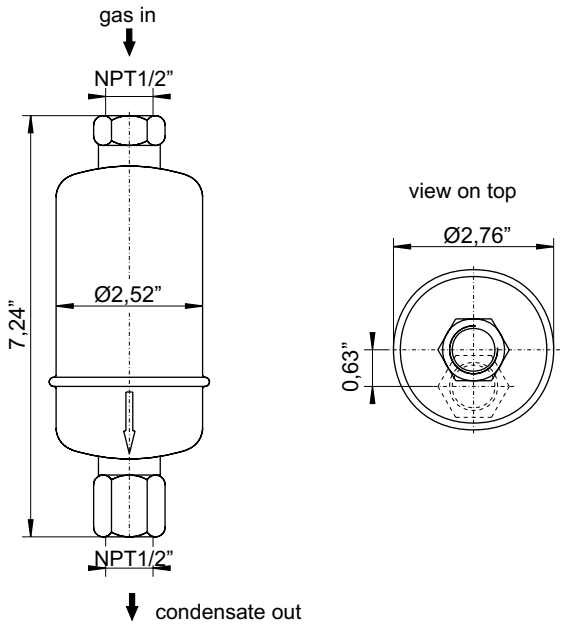

Please indicate with order

part no.	*type*
45 10 006	AK 5.1 horizontal inlet
45 10 008	AK 5.2 vertical inlet
44 10 004	AK 20
44 10 001	11 LD V 38

Attention!
Be careful:
condensate may be harmful

we reserve the right to amend specification