Sample Gas Cooler
EGK 1/2

Accurate measurements of gas components require gas samples with stable dew points even under harsh ambient conditions.

The EGK types provide a cooling system basically designed like a refrigerator type cooling system connected to a cooling block. This cooling block has an even heat dissipation and thus supports the performance of highly efficient heat exchangers. While the compressor is running constantly the temperature regulation is done by the Bühler-constant-regulating-system. This system allows very smooth regulation and eliminates all disadvantages of the traditional on-off operating mode.
The cooling block takes either a single stream or a dual stream heat exchanger hence the cooler is suitable to serve two separate gas sample streams.

Depending on the system's basic principle the condensate is removed either by peristaltic pumps (up to two can be integrated into the cooler's cover), by automatic condensate drains or condensate vessels.

- **compact design**
- **single or dual gas streams**
- **heat exchangers made of stainless steel or duran glass**
- **Bühler-constant-regulating-system**
- **selfchecking**
- **status alarm**
- **display of cooling temperature**
- **cooling capacity 300 btu/h**
- **dewpoint stability 0,2 °F**

Bühler Meß- und Regeltechnik GmbH
D - 40880 Ratingen, Harkortstr. 29
Tel.: + 49 (0) 2102 / 4989-0 Fax: + 49 (0) 2102 / 4989-20
e-mail: analyse@buehler-ratingen.com

technical data

ready for operation	max. 15 minutes
cooling capacity (at 77°F)	300 btu/h
ambient temperature	+40...+120 °F
dewpoint (set at factory)	approx. 40 °F
dewpoint variations static	0,2 °F
over full operation range	± 2,7 °F
power supply	115 or 230V, 50/60 Hz, plug according to DIN 43650
power consumption	180 VA, fuse (external) 10 A
alarm output:	max. 250V, 2 A, 50 VA plug acc. to DIN 43650
protection class	IP 20
housing	stainless steel
installation	table or wall mounting
packing dimensions	approx. 15,5 x 12 x 16 inches
weight incl. heat exchangers	approx. 15 kg

dimensions

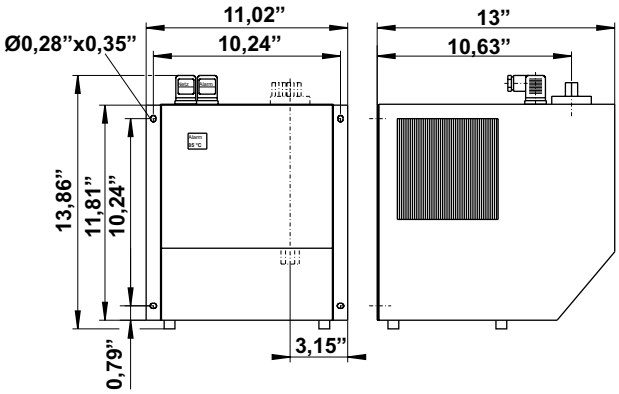

performance data’s

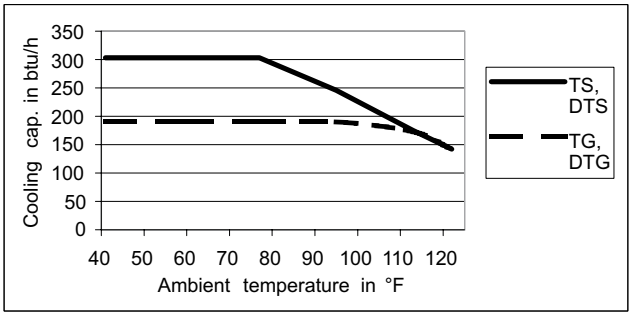

typical installation scheme:

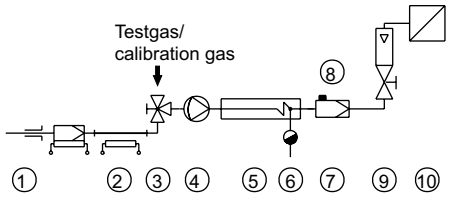

1 sample probe
2 sample tube
3 3 way valve
4 sample gas pump
5 sample gas cooler EGK-1/2
6 automatic condensate drain or perist. pump
7 moisture detector
8 fine filter
9 flowmeter
10 analyser

Types and datas of components see individual data sheets.

heat exchanger

The energy content of the sample gas and as a result the required cooling capacity is determined by 3 parameters: gas temperature ϑ_G, dewpoint τ_e (moisture content) and flow Q. The outlet dew point raises with increasing energy content of the gas due to physical rules. The acceptable cooling capacity is determined by a tolerated raise of the outlet dew point.
The following limits are set for τ_e=149°F and ϑ_G=194°F. Indicated is the Q_{max} in Nl/h cooled air i.e. after the moisture has condensated.
If the real values stay below the parameters τ_e and ϑ_G, Q_{max} can be increased. As an example instead of τ_e= 149°F, ϑ_G= 194°F and v= 250 l/h the values τ_e=122°F, ϑ_G=176°F and v=350 l/h could be accepted.
Please let us know if you want assistance or use our cooler adaption programme.

heat exchanger	**TS**	**TG**	**DTS**	**DTG**
flow rate v_{max} [1)]	400 l/h	250 l/h	2 x 200 l/h	2 x 125 l/h
inlet dewpoint $\tau_{e,max}$ [1)]	180 °F	180 °F	180 °F	150 °F
gas inlet temperature. $\vartheta_{G,max}$ [1)]	360 °F	285 °F	360 °F	285 °F
max. cooling capacity Q_{max}	320 btu/h	190 btu/h	320 btu/h	190 btu/h
gas pressure p_{max}	2300 psi	43 psi	360 psi	43 psi
pressure drop Δp (v=150 l/h)	0,1 psi	0,1 psi	each 0,1 psi	each 0,1 psi
death volume V_{tot}	45 ml	25 ml	2 x 40 ml	2 x 25 ml
sample gas connections	G 1/4“ i [2)]	GL 14	tube 6 mm	GL 14
condensate out connections	G 3/4“ i [2)]	GL 25	tube 10 mm	GL 18

[1)] with maximum heat transfer of the heatexchanger and max. cooling capacity of the cooler [2)] NPT-threads upon request

Please indicate with order

cooler

45 65 999	EGK-1/2 230 V 50/60Hz
45 66 999	EGK-1/2 115 V 50/60Hz

heat exchanger

45 10 023	TS, stainless steel 1.4571
45 10 013	TG, Duran glass
45 01 026	DTS, stainless steel 1.4571, dual
45 01 027	DTG, Duran glass, dual

accessories

44 10 001	automatic condensate drain 11 LD V 38
44 10 004	automatic condensate drain AK 20, PVDF
44 10 005	condensate vessel GL 1; glass, 0,4 l
44 10 019	condensate vessel GL 2; glass, 1 l
45 10 130	1 peristaltic pump 230 V, 0,3 l/h, built-in
45 10 230	second peristaltic pump 230 V, 0,3 l/h, built-in
45 10 131	1 peristaltic pump 115 V, 0,3 l/h, built-in
45 10 231	second peristaltic pump 115 V, 0,3 l/h, built-in
45 10 122	per. pump 230 V, 0,3 l/h, separat mounting
45 10 222	per. pump 115 V, 0,3 l/h, separat mounting

we reserve the right to amend specification