Condensate Vessels

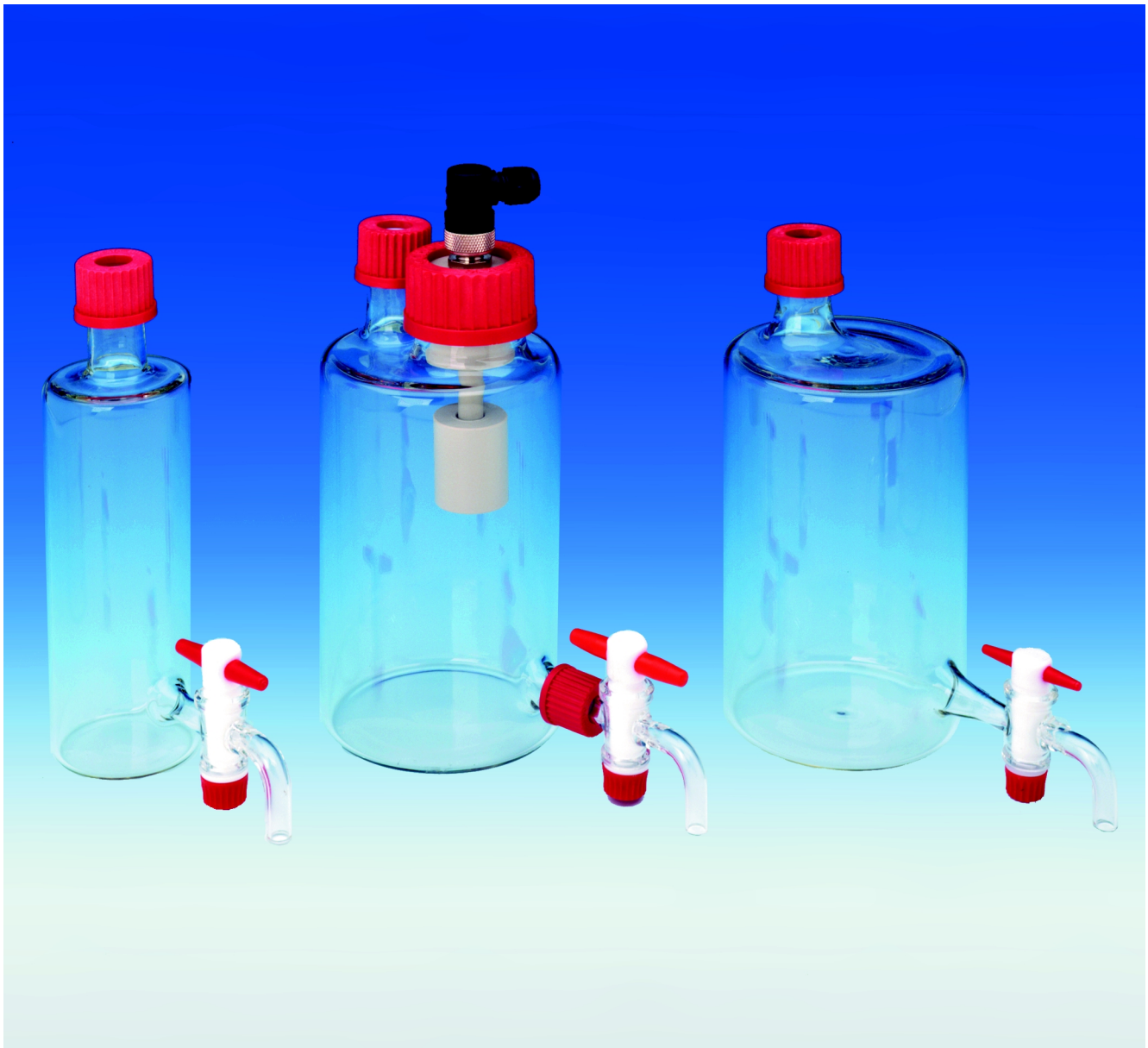

In sample conditioning systems which cannot work on overpressure the condensate removal from the sample gas coolers or similar equipment requires either the use of peristaltic pumps or of intermediate storage vessels.
The vessels GL 1 and GL 2 have a drain cock and differ only by their storage volume.

The GL 3 vessel includes a liquid level switch, which might signal the level or drive a draining pump. The drain out is designed as a tube connection. Optionally a drain cock may be fitted.
All condensate vessels are corrosion resistent due to their materials duran glas and PTFE.

Bühler Meß- und Regeltechnik GmbH
D - 40880 Ratingen, Harkortstr. 29
Tel.: + 49 (0) 2102 / 4989-0 Fax: + 49 (0) 2102 / 4989-20
e-mail: analyse@buehler-ratingen.com

Technical data

Contact GL 3 230 V, 1 A, 40 VA, changeover

wiring diagram GL 3

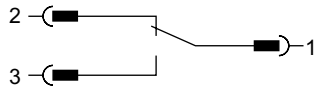

Type GL 1, GL 2

Type GL 3

Type GL 3 with optional cock

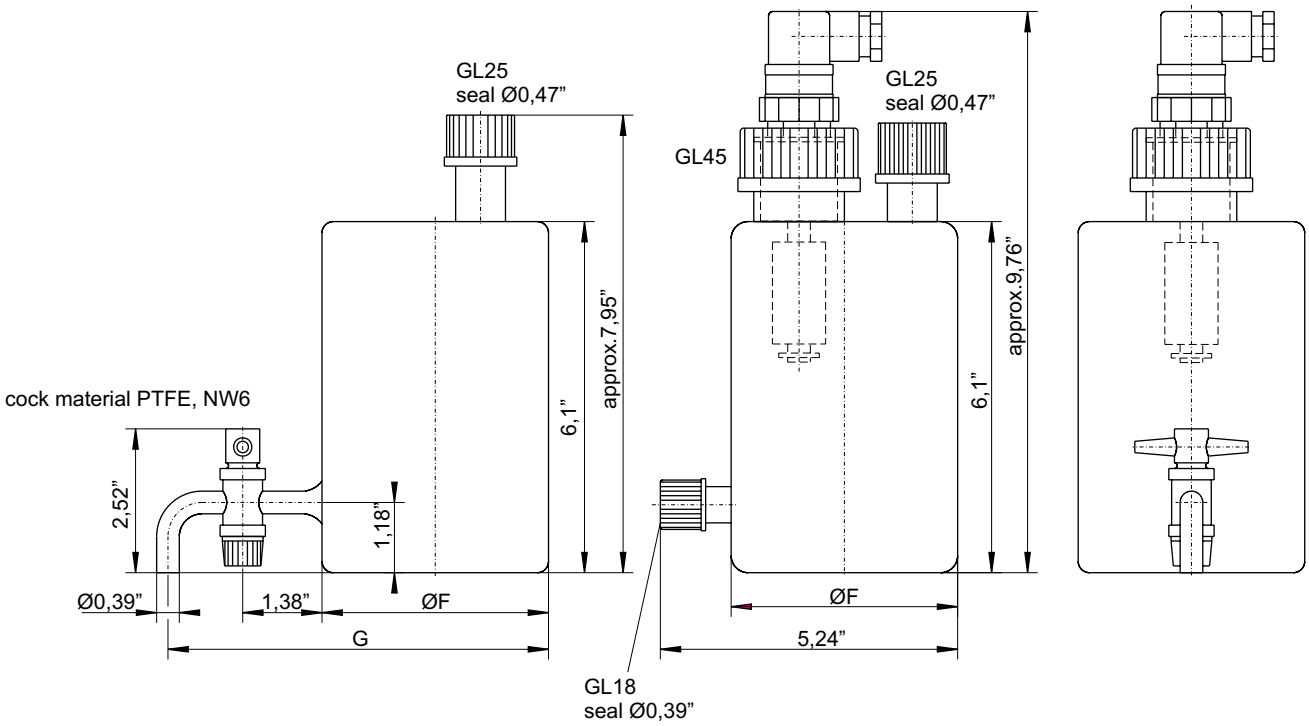

type	*A*	*C*	*D*	*E*	*F*	*G*	*content*
GL 1	2,56”	3,94”	2,48”	3,35”	Ø 2,36”	5.04”	0,4 l
GL 2/ GL 3	5,71”	5,98”	3,58”	6,50”	Ø 3,94”	6,61”	1 l

wall mounting

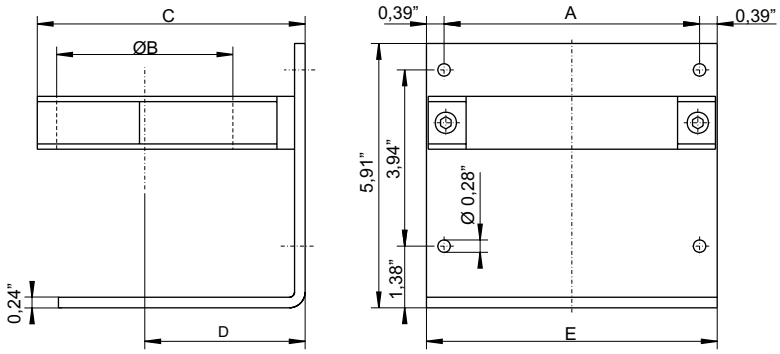

Please indicate with order

part no.	*type*
44 100 05	condensate vessel GL 1, with PVC support
44 100 19	condensate vessel GL 2, with PVC support
44 100 29	condensate vessel GL 3, with PVC support, without cock
44 100 292	optional cock for GL 3

we reserve the right to amend specification